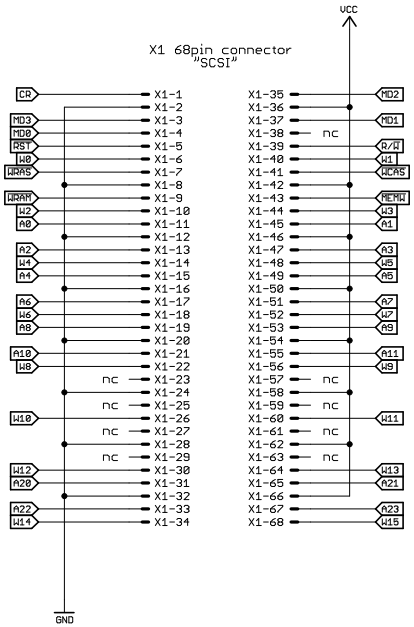

pin1 is on the right side when looking on top of PCB

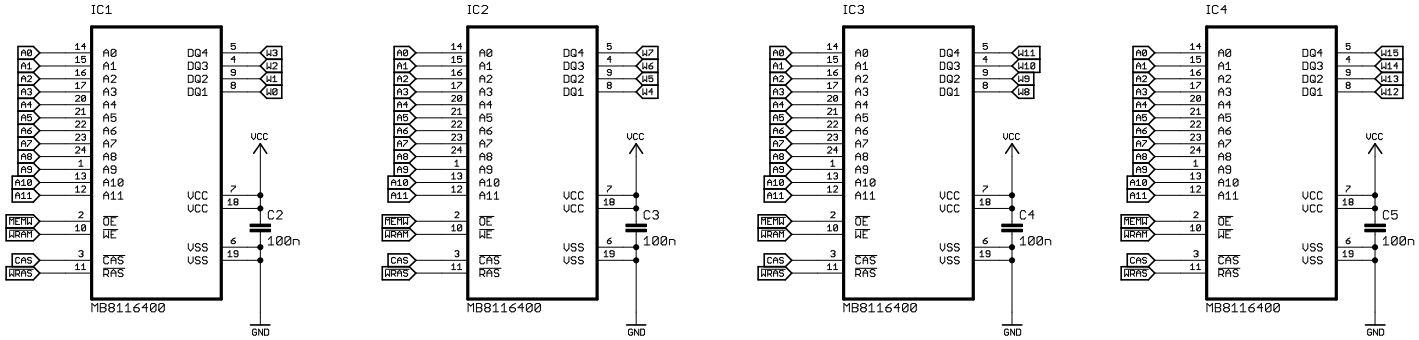

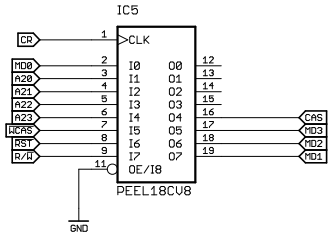

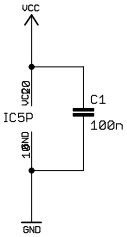

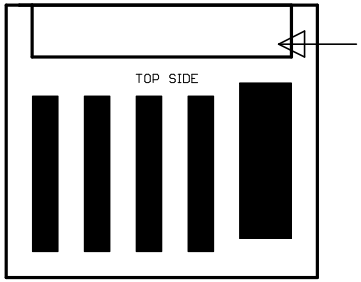

AKAI EXM3008 MEMORY

reverse-engineered and drawn

by tOri

Polish reverse-engineer and Atari Fan!

tOri
(rvsd)
2025